Exhibit 3

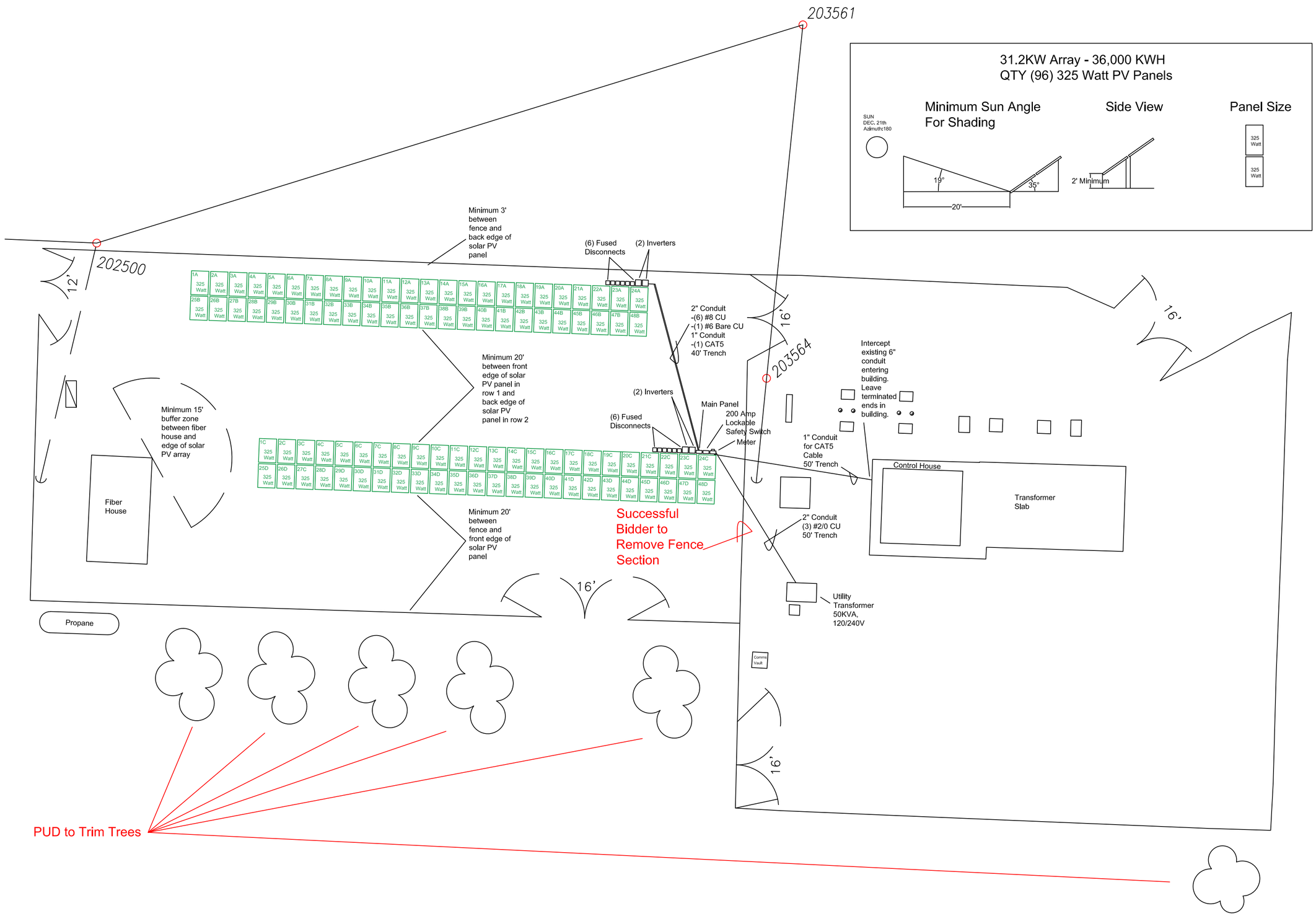

SEQUIM SUB SOLAR PV									DSGN	CY	9/28/2018	CLALLAM COUNTY PUD #1	DRAWING SET: A
									SURV				REV 2
									STKD			SEQUIM SUB LAYOUT	
									SCALE:	NOT TO SCALE			DRAWING NUMBER
	0	ISSED FOR USE											PAGE 1 OF 6
	REV	REVISIONS	DATE	DRN	DSGN	CKD	APPD	REFERENCE DRAWINGS					

CLALLAM COUNTY PUD #1 — Bringing Energy to Life™

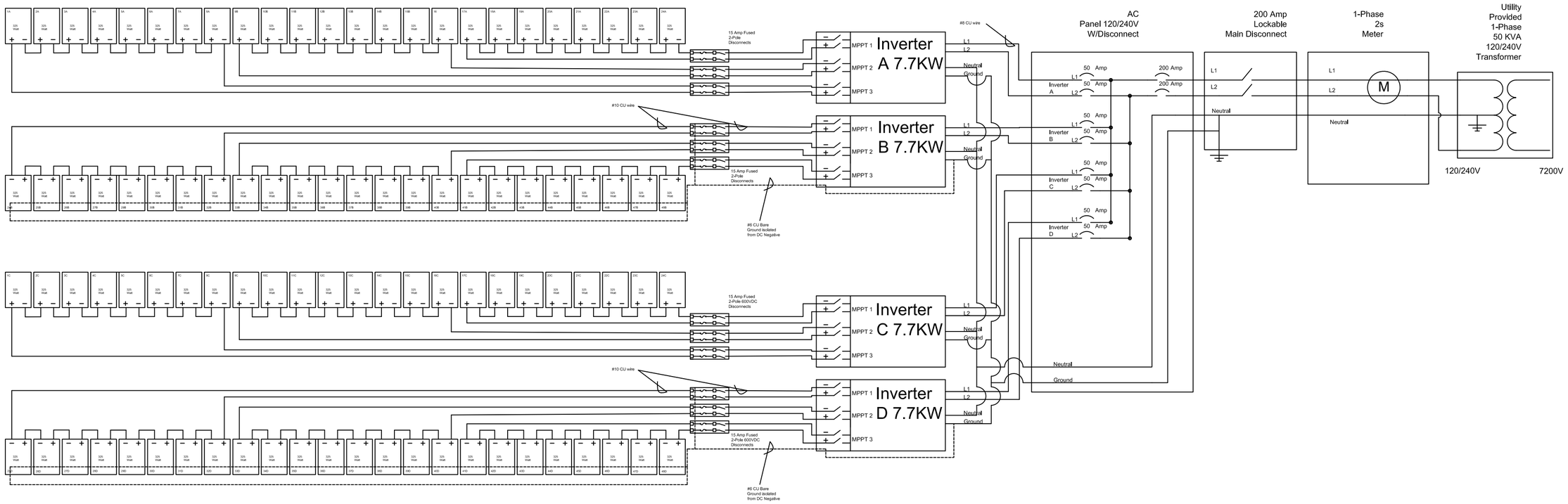

Solar Panel Calculations:

1) 8 panels per string - 325 Watt DC per panel - 2600 Watts per string
2) 3 strings per inverter - 7800 Watts DC per inverter - Total DC 31200 Watts
3) AC inverter output - 7700 Watts AC per inverter - Total AC 30800 Watts
4) Designed string voltage not to exceed - 8 panels X 37.0 Volts X NEC Voltage Correction Factor 1.14 (Extreme Annual Dry Bulb Temp = 21.4F William R Fairchild Airport, WA) = 337.4 Volts

Inverter:

1) Output Wattage - 7700 Watts
2) Output Voltage - 120/240V
3) Input DC Voltage Range - 100V to 550V

Solar Panel:

1) Output Wattage - 325 Watts
2) Max VOC - 37 Volts
3) Short Circuit Current - 11.31 Amps

SEQUIM SUB SOLAR PV										DSGN	CY	9/28/2018	CLALLAM COUNTY PUD #1	DRAWING SET: A	REV 2
										SURV			INVERTERS & SOLAR PV		
										STKD					
										SCALE: NOT TO SCALE				DRAWING NUMBER PAGE 2 OF 6	
	0	ISSED FOR USE													
	REV	REVISIONS	DATE	DRN	DSGN	CKD	APPD	REFERENCE DRAWINGS							

CLALLAM COUNTY PUD Bringing Energy To Life™

Trench Specification

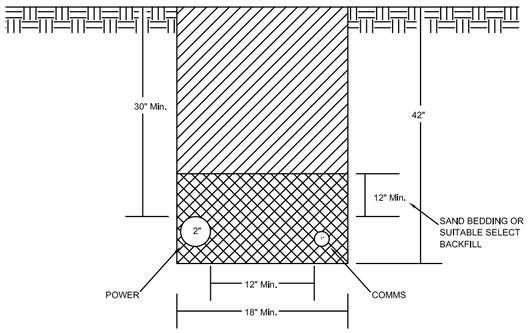

NOTES:

The bottom of all trenches shall be smooth; uniform; and free of all loose rock, stone, other sharp objects, and foreign material. Hand-fill where large rocks are encountered and as directed by the Engineer.

The initial twelve (12) inches of fill over conduit shall be carefully selected from excavate materials and placed with due care to prevent damage.

Where needed, trenches having abrasive bottom characteristics three (3) inches of sand cushion below the duct bank and three (3) inches of sand cover above the duct bank shall be used in addition to the normal backfill.

All excess excavated material from all trenches shall be loaded and removed from the site without contaminating existing finished subgrade material.

No trash, including food waste, food containers, and construction materials, will be placed in trenches.

LEGEND

- UNDISTURBED EARTH
- COMPACTED BACKFILL
- SAND OR SUITABLE SELECT BACKFILL

Grounding Specification

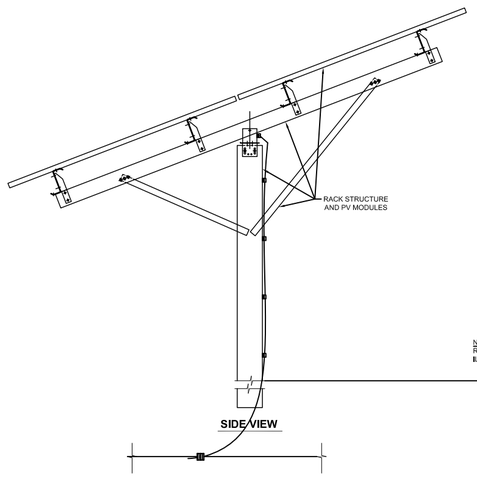

SIDE VIEW

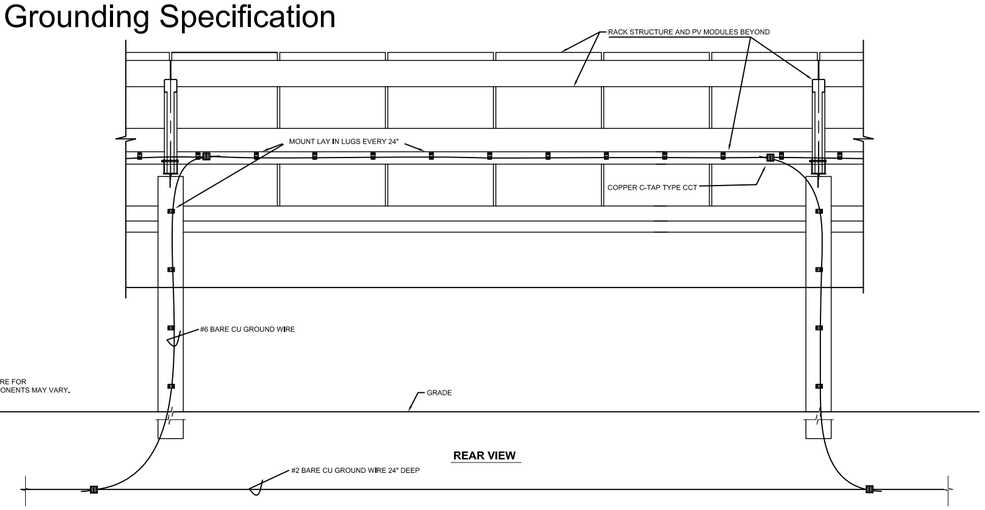

REAR VIEW

NOTE:
RACK STRUCTURE AND PV MODULES SHOWN ARE FOR ILLUSTRATIVE PURPOSES ONLY. ACTUAL COMPONENTS MAY VARY.

Meterbase Ground

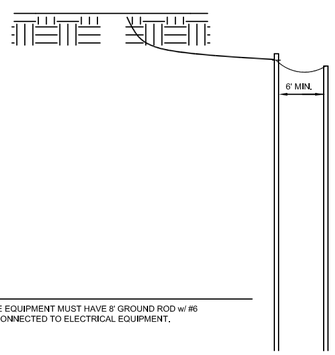

NOTES:

1. SERVICE EQUIPMENT MUST HAVE 8' GROUND ROD w/ #6 COPPER CONNECTED TO ELECTRICAL EQUIPMENT.

INVERTER/FUSE BOX MOUNTING

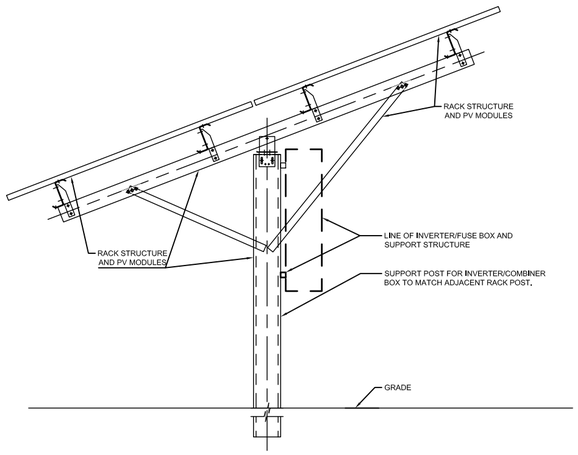

SIDE VIEW

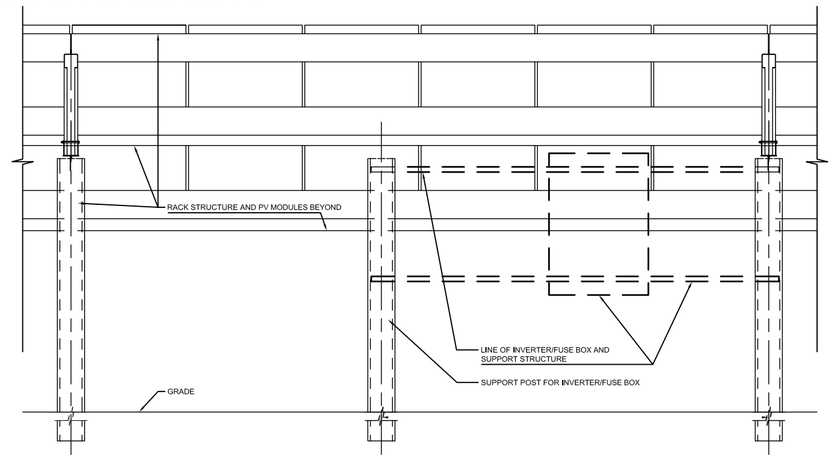

REAR VIEW

NOTE:
RACK STRUCTURE AND PV MODULES SHOWN ARE FOR ILLUSTRATIVE PURPOSES ONLY. ACTUAL COMPONENTS MAY VARY.

SEQUIM SUB
SOLAR PV

REV	REVISIONS	DATE	DRN	DSGN	CKD	APPD	REFERENCE DRAWINGS
0	ISSED FOR USE						

DSGN	CY	9/28/2018
SURV		
STKD		
SCALE:	NOT TO SCALE	

CLALLAM COUNTY PUD #1

SPECIFICATIONS

DRAWING SET: A

REV 2

DRAWING NUMBER

PAGE 3 OF 6